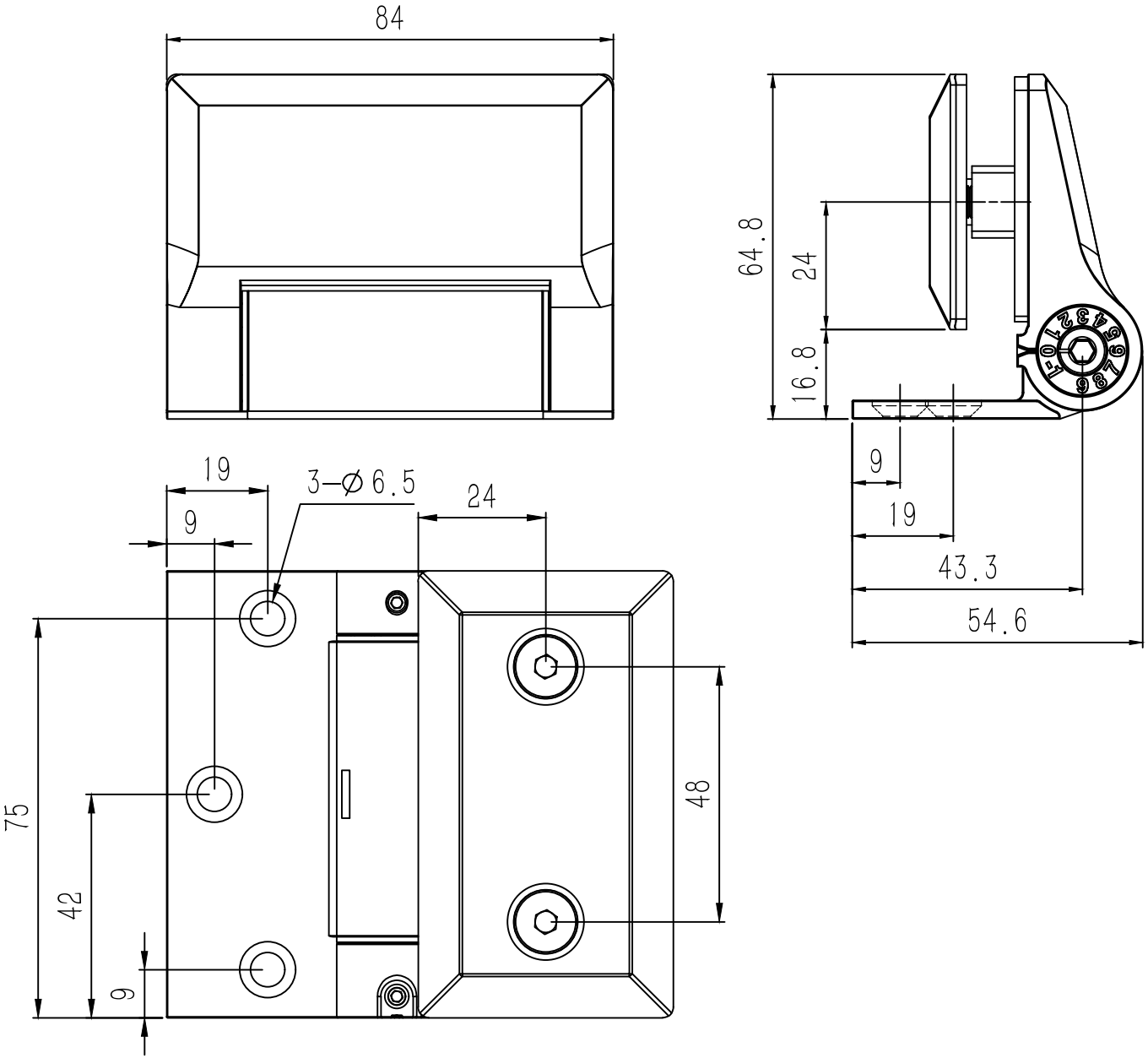
84
64.8
24
16.8
9
19
43.3
54.6
19
9
3−Ø6.5
24
75
42
9
48