POLARIS
SOFT CLOSE HINGE

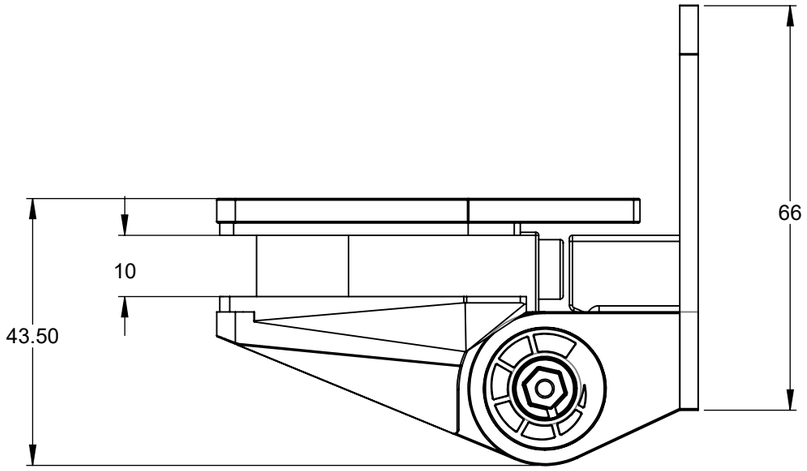

TOP VIEW

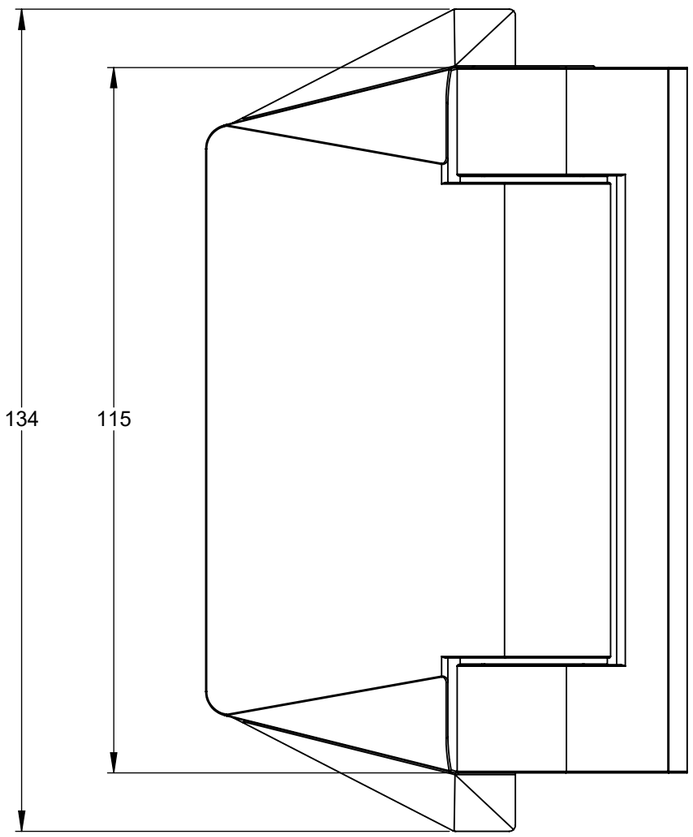

FRONT VIEW

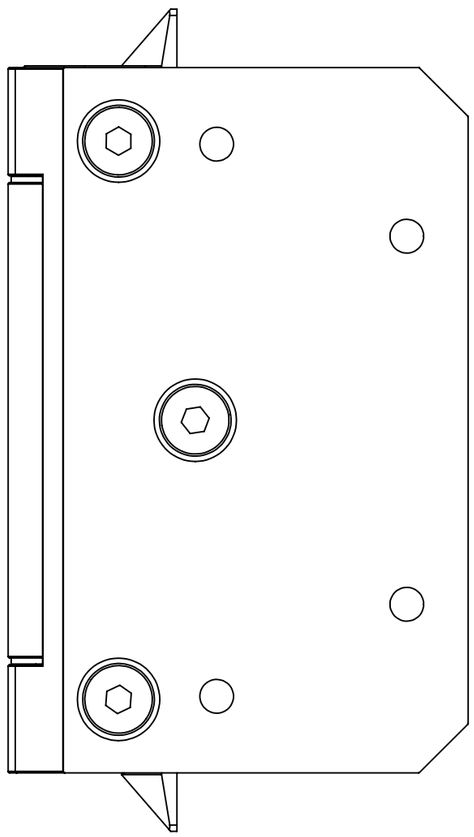

SIDE VIEW

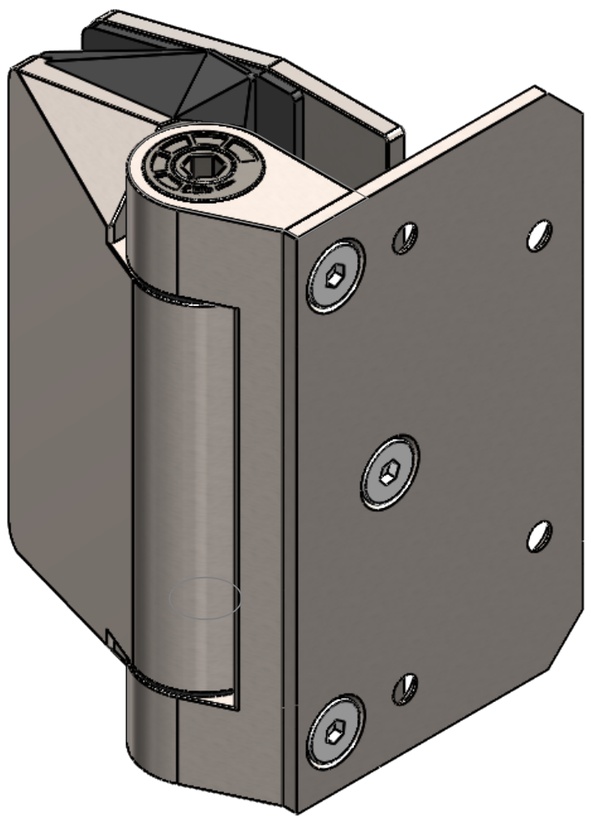

ISOMETRIC VIEW