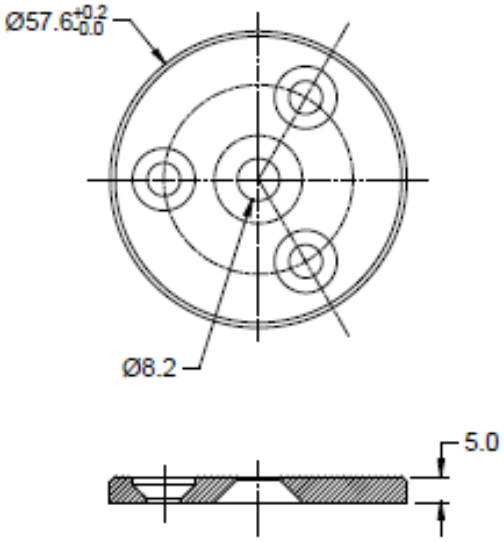

Part No:-1 Plate

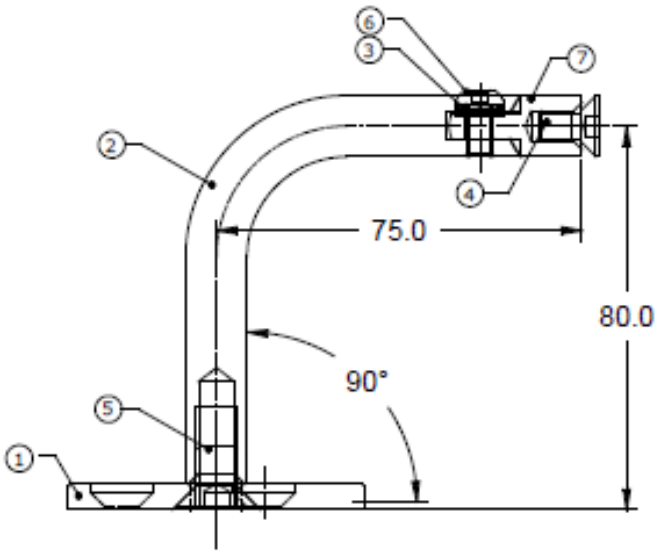

Assembly

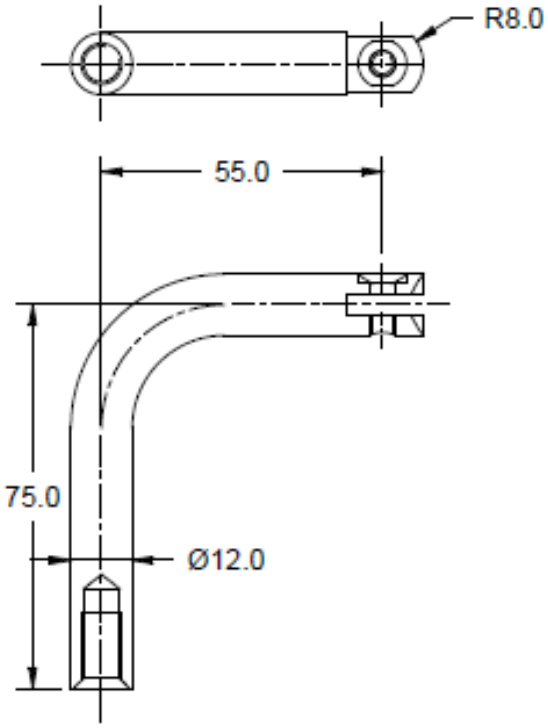

PART NO.-2 Bend Rod

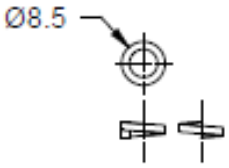

PART NO.-3
SS-Spring Washer

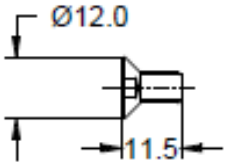

Allen Head Screw
Part No.-4

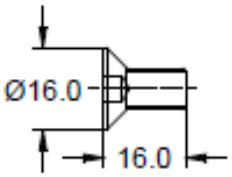

Allen Head Screw
Part No.-5

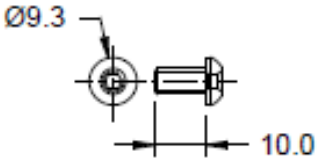

PART NO.-6
Allen Head Screw

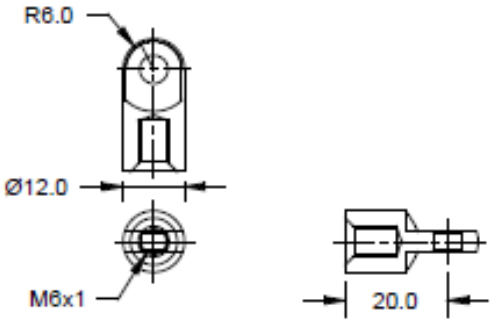

PART NO.-7