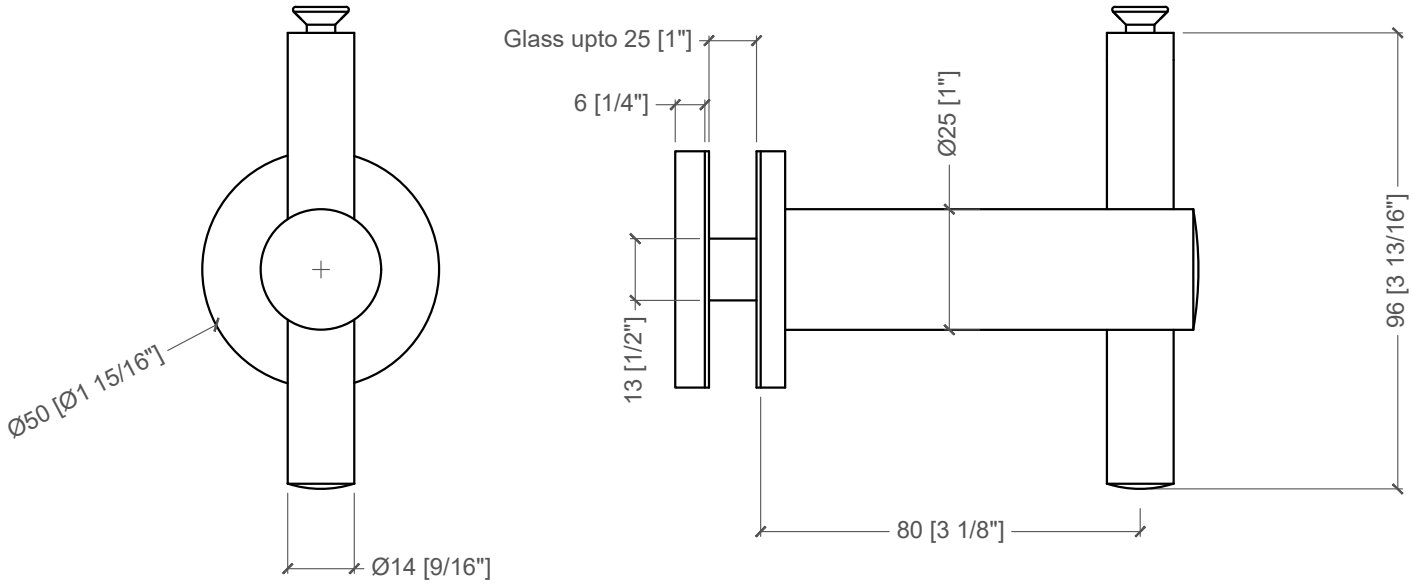

SSGF0010016S – SS 316 SATIN
SSGF001001GB – SS 316 GRAPHITE BLACK

This drawing is the property of Euro Ornamental Forgings Inc. and may not be copied or reproduced in any way whatsoever without express written permission of said company.

euro ARCHITECTURAL COMPONENTS

127A Aviva Park Dr.,
Woodbridge, ON, CANADA
www.euroeac.com
Toll Free: 1-800-465-7143

TITLE: ADJUSTABLE FIXED OFF-THE-GLASS BRACKET WITH 50mm BACK
SS 316

DATE: 12 JAN 2021

SHEET: 1 OF 1